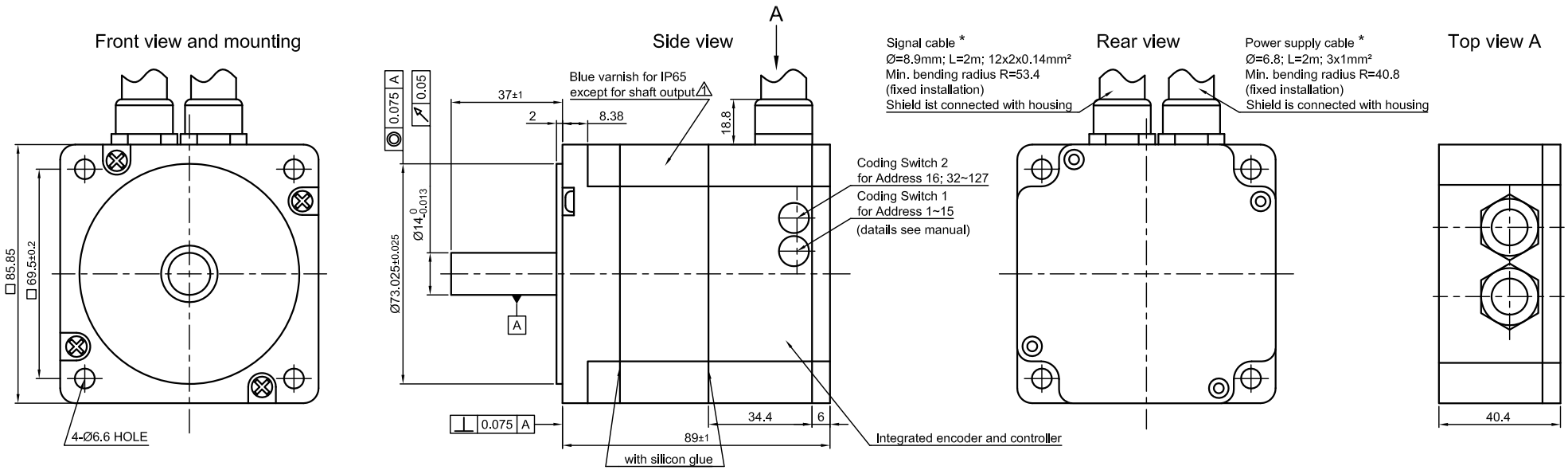

CONNECTION / SPECIFICATION	BIPOLAR PARALLEL
SUPPLY VOLTAGE (VDC)	24 to 48
AMPS/PHASE	* adj. to 11A (rated 7A)
HOLDING TORQUE (Nm) [lb-in]	3.2 [28.32]
DETENT TORQUE (Nm) [lb-in]	0.11 [0.974]
STEP ANGLE (°) ± ACCURACY	* 1.8 to Microstep
WEIGHT (Kg) [lb]	1.7 [3.75]

* adjustable with Nanopro.

INPUT CONNECTION

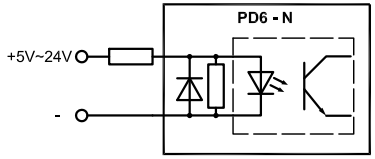

OUTPUT CONNECTION

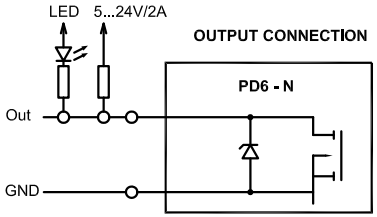

PERMISSIBLE RADIAL+AXIAL FORCE

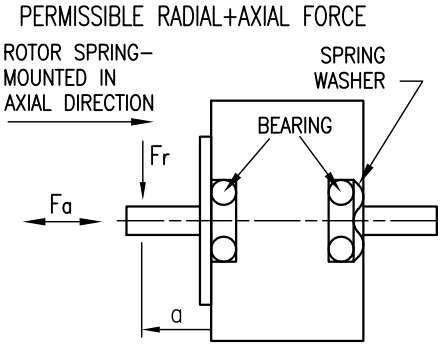

SIGNAL CABLE	
FUNKTION	COLOUR
INPUT 1	BK
INPUT 2	VI
INPUT 3	GY/PK
INPUT 4	RD/BU
INPUT 5	WH/GN
INPUT 6	BN/GN
INPUT ANALOG	WH/BU
OUTPUT 1	WH/YE
OUTPUT 2	YE/BN
OUTPUT 3	WH/GY

SIGNAL CABLE	
FUNCTION	COLOUR
RS485 Tx+	GY
RS485 Tx-	PK
RS485 Rx-	YE
RS485 Rx+	GN
CAN +	BN
CAN -	WH
SIGNAL GND (COM)	GY/BN
GND	BU/PK + BN
GND LOGIC	RD
+ UB LOGIC	WH/PK (20~48V)

POWER SUPPLY CABLE	
FUNKTION	WIRE NO./COLOUR
+UB	1
GND	2
PROTECTIVE WIRE	GN/YE

☞ ALL GND AND COM SHOULD BE CONNECTED

* OPTIONALLY WITH POWER CHAIN CABLE/UL LICENSED. FOR SIGNAL CABLES ARE NOT ALL I/O'S AVAILABLE.

OVERTEMPERATURE PROTECTION (ELECTRONICS): 80°C
AMBIENT TEMPERATURE -10°~ 50°C [14°F ~ 122°F]
INSULATION RESISTANCE 100 MOhm (UNDER NORMAL TEMPERATURE AND HUMIDITY)
INSULATION (MOTOR) CLASS B 130° [266°F]
DIELECTRIC STRENGTH 500VAC FOR 1 MIN. (BETWEEN THE MOTOR COILS AND THE MOTOR CASE)
AMBIENT HUMIDITY MAX. 85% (NO CONDENSATION)

AXIAL-FORCE Fa (N)	Fa=65			
DISTANCE a (mm)	5	10	15	20
RADIAL-FORCE Fr (N)	535	355	256	200

	AXIAL	RADIAL
SHAFT PLAY (mm)	0.075	0.025
AT LOAD MAX: (N)	10	5

REV	DESCRIPTION	DATE	APVD
1	RESTRICTION SUPPLEMENTED	18.02.10	J.W.

Nanotec® PLUG & DRIVE

PD6-N8918S6404

SCALE FREE	
X	±0.5
1PL	±0.2
2PL	±0.1
ANGLE	±30'

APVD	S.Ha.	13.07.09
CHKD		
DRN	J.W.	13.07.09
SIGNATURE		DATE

STEPPING MOTOR

DWG.NO PD6-N8918S6404